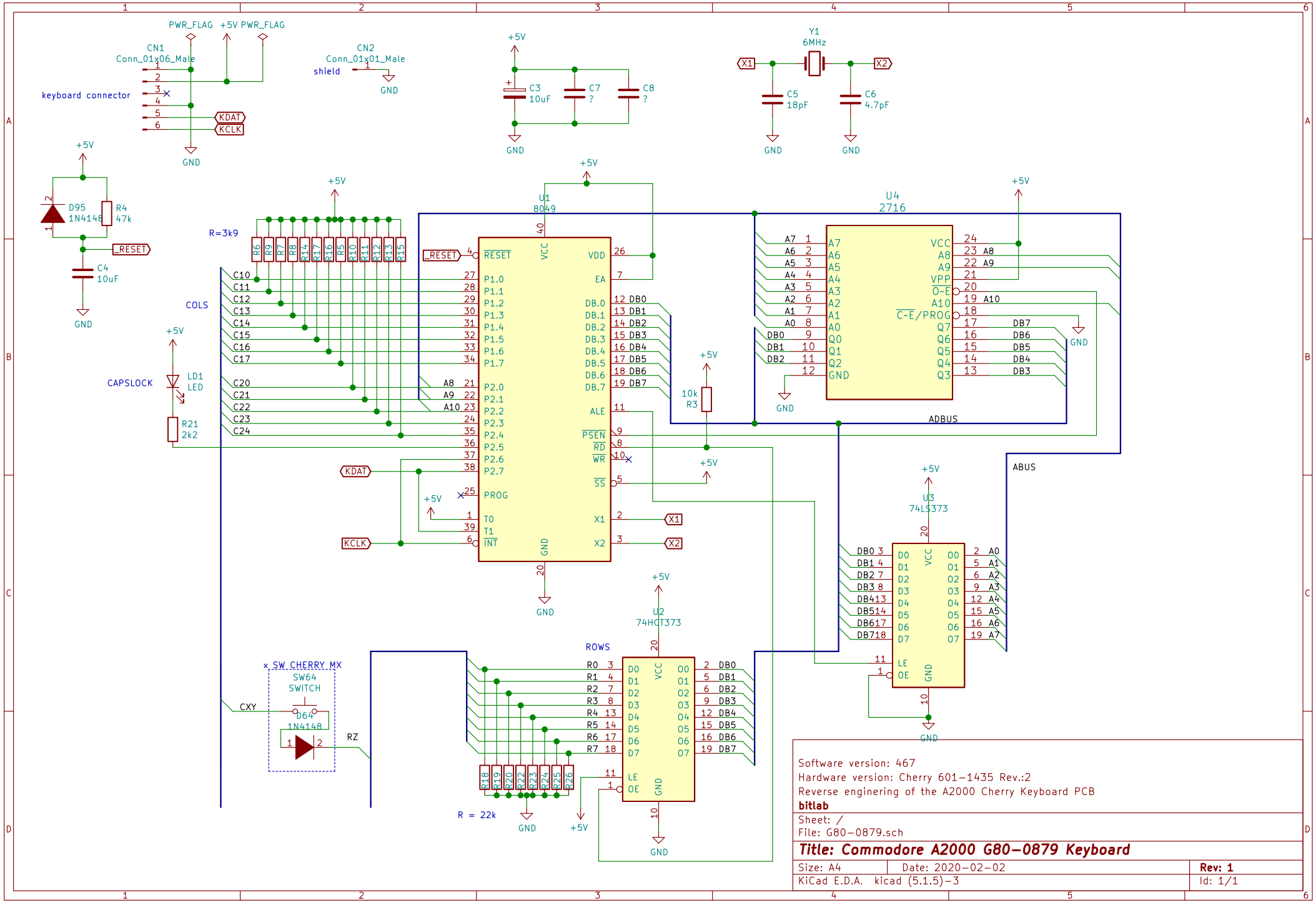
CN1
Conn_01x06_Male
keyboard connector
PWR_FLAG
+5V
KDAT
KCLK
GND
CN2
Conn_01x01_Male
shield
C3
10uF
C7
?
C8
?
Y1
6MHz
X1
X2
C5
18pF
C6
4.7pF
D95
1N4148
R4
47k
_RESET
C4
10uF
R=3k9
R6
R9
R7
R8
R14
R17
R16
R5
R10
R11
R12
R13
R15
COLS
CAPSLOCK
LD1
LED
R21
2k2
U1
8049
RESET
VCC
VDD
EA
P1.0
P1.1
P1.2
P1.3
P1.4
P1.5
P1.6
P1.7
P2.0
P2.1
P2.2
P2.3
P2.4
P2.5
P2.6
P2.7
PROG
T0
T1
INT
DB.0
DB.1
DB.2
DB.3
DB.4
DB.5
DB.6
DB.7
ALE
PSEN
RD
WR
SS
X1
X2
10k
R3
U4
2716
A7
A6
A5
A4
A3
A2
A1
A0
Q0
Q1
Q2
VCC
A8
A9
VPP
O~E
A10
C~E/PROG
Q7
Q6
Q5
Q4
Q3
ADBUS
ABUS
U3
74LS373
D0
D1
D2
D3
D4
D5
D6
D7
LE
OE
O0
O1
O2
O3
O4
O5
O6
O7
U2
74HCT373
ROWS
R0
R1
R2
R3
R4
R5
R6
R7
R18
R19
R20
R22
R23
R24
R25
R26
R = 22k
SW CHERRY MX
SW64
SWITCH
D64
1N4148
CXY
RZ
Software version: 467
Hardware version: Cherry 601-1435 Rev.:2
Reverse enginering of the A2000 Cherry Keyboard PCB
bitlab
Sheet: /
File: G80-0879.sch
Title: Commodore A2000 G80-0879 Keyboard
Size: A4
Date: 2020-02-02
Rev: 1
KiCad E.D.A. kicad (5.1.5)-3
Id: 1/1